Equipment Rails
Technical Product Information

ER-2A & B FOR DECKS WITH LIGHTWEIGHT FILL OR TAPERED INSULATION

RPS EQUIPMENT RAILS are a sure, economical, roof equipment pedestal with continuous wood nailer for the proper attachment of roofing felts, along with removable counterflashing which offers maximum assurance of a watertight installation.

- ELIMINATES THE MAKESHIFT AND AVOIDS OVERDESIGN

RPS EQUIPMENT RAILS provide a standardized support fabricated from heavy gauge galvanized steel with continuous welded corners and designed with the structural integrity to support the majority of all roof mounted equipment.

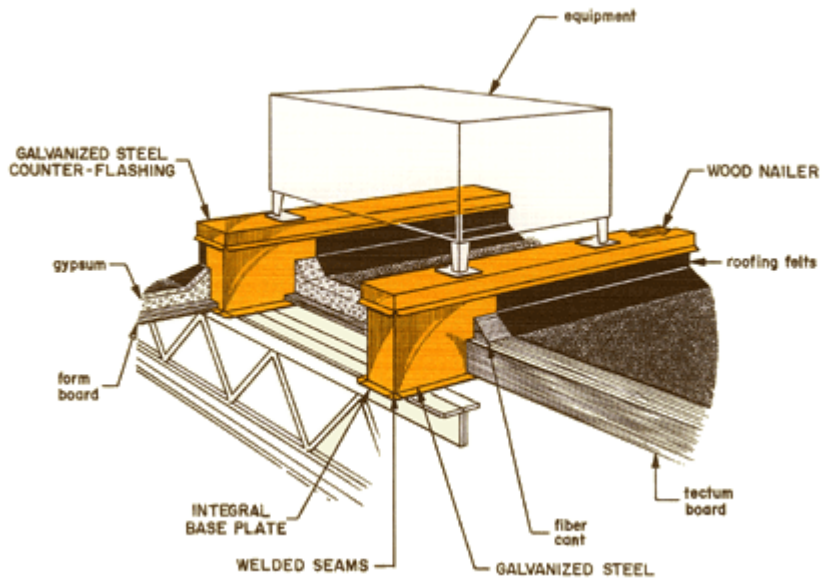

SPECIFICATION

Furnish and install RPS EQUIPMENT RAILS as manufactured by Roof Products & Systems Corporation, Bensenville, IL, at all locations shown on drawings.

Equipment Rails shall be fabricated of 18 gauge galvanized steel, monolithic construction with integral base plate and continuous welded corner seams, with factory installed wood 2x4 nailer. Each equipment rail shall include a matching 18 gauge galvanized steel counterflashing cap with integral drip edge, all corners mitered and welded, and screws for attachment. Equipment Rails over 3 feet long shall incorporate 14 gauge internal gusset reinforcing. Standard rail height to be 12" unless otherwise shown on drawings. On single-ply roofing, lightweight fill, or tapered insulation use RPS Model ER-2A. Use RPS Model ER-2B if additional field installed insulation is required.

CAD Drawing

ER-3A & B STYLE ER- 2A & B SUBMITTAL SHEET ER-4A & B STYLE

ROOF PRODUCTS & SYSTEMS • 815 KIMBERLY DRIVE • CAROL STREAM, IL 60188 • TEL: (800) 624-8642 • FAX: (866) 466-9335

All information is subject to change without notice. Dimensions and specifications shown are within manufacturing tolerances.
© Copyright Commercial Products Group of Hart & Cooley, Inc., November 2007. All Rights Reserved.